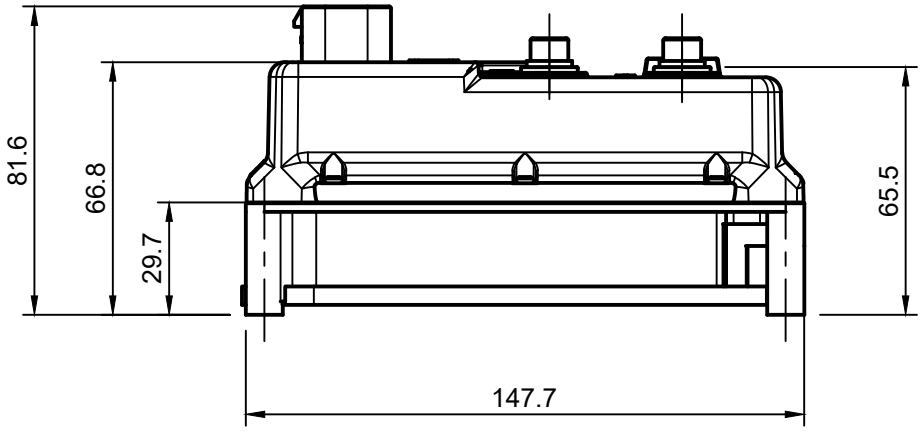

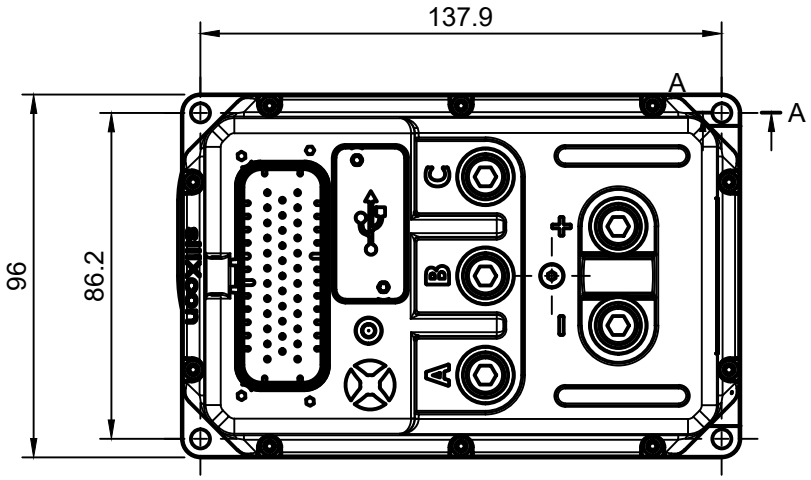

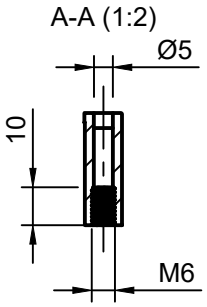

There is two options how to mount controller:

1. Screw controller down with M5 screw

2. Screw M6 screw from bottom to the controller.
   Maximum length of thread witch goes to the controller is 8mm.

MATERIAL:			NAME:	DATE:
WEIGHT: 1.2 kg		DRAWN:	Michal Popelka	05.03.2026
PROJECTION: [ISO E]		CHECKED:		
ACCURACY:		N/A		
TOLERANCE:				

siliXcon	NUMBER: SL-raptor controller assembly	Size A4	Scale 1:2 (From parent)
	PROJECT: SL-raptor_controller_assembly-rev3	Rev 3	List 1/1